Notebook Series -- Notebooks by Edison
Notebook, N-17-04-24

This notebook was used by Edison in April 1917 to record work for the U.S. Navy during World War I. Included are notes pertaining to a series of experiments with various resonators constructed with tuning forks, phonograph diaphragms, and columns of water of varying heights. One entry gives a description and drawing of a related sound measurement device. Several entries indicate that Edison was assisted in these experiments by Jerry T. Chesler, who was able to hear sounds that Edison could not. A second set of entries relates to experiments on direction finding for sounds and objects, which were conducted at Sandy Hook, New Jersey, using telephone receivers and funnels. The pages are unnumbered. Only 22 pages have been used.

April 24 1917

Experiments with our resonant Column in tubes lengthened & shortened with water. Closed at top end by Phonograph Diaphragms & 293 vib sec forked used

So far Experiments show that if top is open the length of Column is $\frac{1}{4}$ of the waves length of fork 11 inches—

But when closed by a Diaphragm about size of tube it length is 1/2 of the waves length—

But if the top of a $2\frac{1}{2}$ dia tube is provided with a large circular platform

293 V6

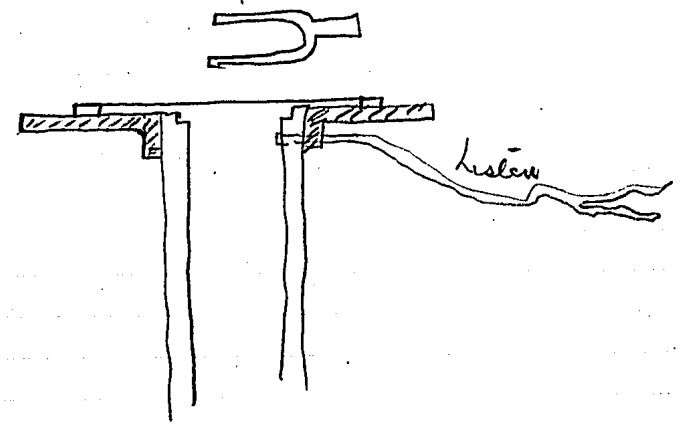

and rings covered with a mica diaphm are used the results so far are variable. The diameter of diaphm & the chamber due to use of larger diaphm than dia of Tubes brings in new factors—

First test shows
30 inch column No cooler
Edison only hears fork thru listening tubes 2"
Shortening Column by use of washers made it weaker
The Diaphm used was 4½ inches

When a 3 7/8 dia diaphragm was used, still 30", no cooler Edison got 4 inches away of tuning fork from diaphragm

With a $3\frac{3}{16}$ dia. Water had to be used until the air Column was only EIGHT inches, Then Edison got it at $4\frac{1}{2}$ inches

With $2\frac{1}{4}$ diaphragm — air column was 19 3/4 for best point Edison got it at $3\frac{1}{4}$ inches

The above experiments are very Conflicting -

Possibly the diaphragm has a Tone itself when 3 3/16 dia & Threw it out

We now tonight have got a new tube 50 1/2 inches - with large water gauge outside but connected to Column with index -
Dia inside of tube $2\frac{1}{4}$"
We also have the same diaphragm - but in addition have discs of brass - to fit in a notch at top of tube to reduce the hole from $2\frac{1}{4}$ down to 1/2 inch -
Also we have extra discs in which the same thing is attained of contracting size of hole + at same

For tune we use a self vibrating fork about 290. using U magnet —

In front of the prong we have a Bell receiver which can be adjusted to & from the prong

Probably most of current is due to the magnet exciting the fork —

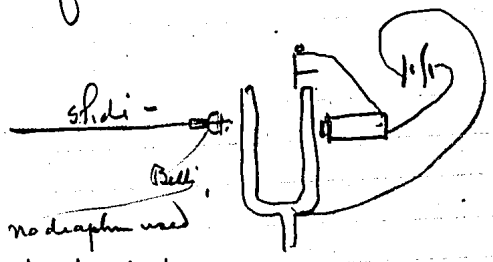

no diaphm used

my limit is about 1/8 away from prong using Bell to listen to,

time making a Tapering Chamber

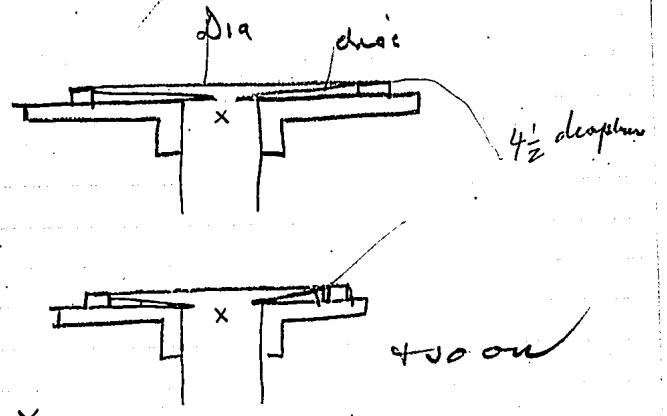

Hole X -

Experiment # 1 4½ diaphm —

Taper chamber hole 2¼ makes ~~or same~~ as dia of Tube itself -

Use Vaseline to hold diaphm ring down on platform which it does very good — Bell phone worked by fork in barn quiet at point where I can just hear it

Jerry finds best point 30.6"
for length air Column

Edison Cant hear it thru Ear
tubes when phone 1/4 from
Diaphm — So there is no gain
but a loss of Volume in this
arrangement as it is —
Ear tubes 3/8 for 10" + 3/16 - for 12"
But Edison Cant hear phone direct
Except pressed hard against ear
when just against ear a few thousandths
of not touching E Cant hear
anything —

Jerry thinks that with 6.5 air
Column he gets it a little
louder than at 30.6 inches

Jerry says fork is lower tone than
293 on account of Magnet etc

He says he can tell the best
point Easier now + more
accurate as Current or
sound is so much weaker

Expmt #2 Same 4½" Dia
But with taper. chamber
having 1 3/4 hole over
Column.

Jerry finds best. 5.8 for short
& 25 for long - also at
32.5, then high note, may be the
spring on fork.

Jerry thinks Volume about same
as in Expt #1 - but has no
index to tell by - will
try one up after making
preliminary runs

Note
not quite as loud
as # 2

Expt 3 -
Same $4\frac{1}{2}$ dia & ring but
hole in ring is now
$1\frac{1}{4}$ inches - (we left out
the $1\frac{1}{2}$)

Short Column 5.2 inches
Long. 24.2 ~~[illegible]~~
not so loud as No 2 Experiment.

Hears phone at a distance
from the diaphragm of
$2\frac{1}{2}$ inches &
also when listening
to phone direct its
$2\frac{1}{2}$ inches. This
shows that we can
do as well with
Resonant Column & ear
tubes as without giving

No gain in Volume
+ yet get benefit of
Resonance - to diminish
general noise —
Guess its to be a 90
but dont understand
these short columns
without its the tone
of Dia or - overtone in fork
made by magnet throwing a segment
into vibration - probably this +

Next morning found a piece
of tape had fallen on fork fixed it
Repeated Experiment - Long
Column 30.3 short 5.8

Listening tube - straight part
5/16 hole
30.5
short tube -
9"
5/16 -

We now try the Experiment over with the shorter listening tubes.

Can now only hear music note 2" instead of 2½ with long listening tubes.

Short listening 5.9

This is practically the same as with long Stethoscope tubes.

We now try long Column with short Stethoscope tube — it shows 30.1 practically the same.

Reading thus

29.7 inches -		1.½ away
29.9 "		1.3/4
30 "		2.⅛
30.1	rise & fall.	2.3/4
30.2	about 1% -	2 ½
30.3	or 6/10 of % rise " % fall.	2 ⅛

A rough test show sound of fork goes from silence to silence - 22" to 34"

but this is too rough to judge by.

Jerry finds that outside noise tends to hit diaphm + start air column going giving same note as fork but its weak -

Also moving of the water column scraping on rough sides of the Brass tubes makes noise must be polished or made of glass

[illegible]

Now we have accurate measuring apparatus -

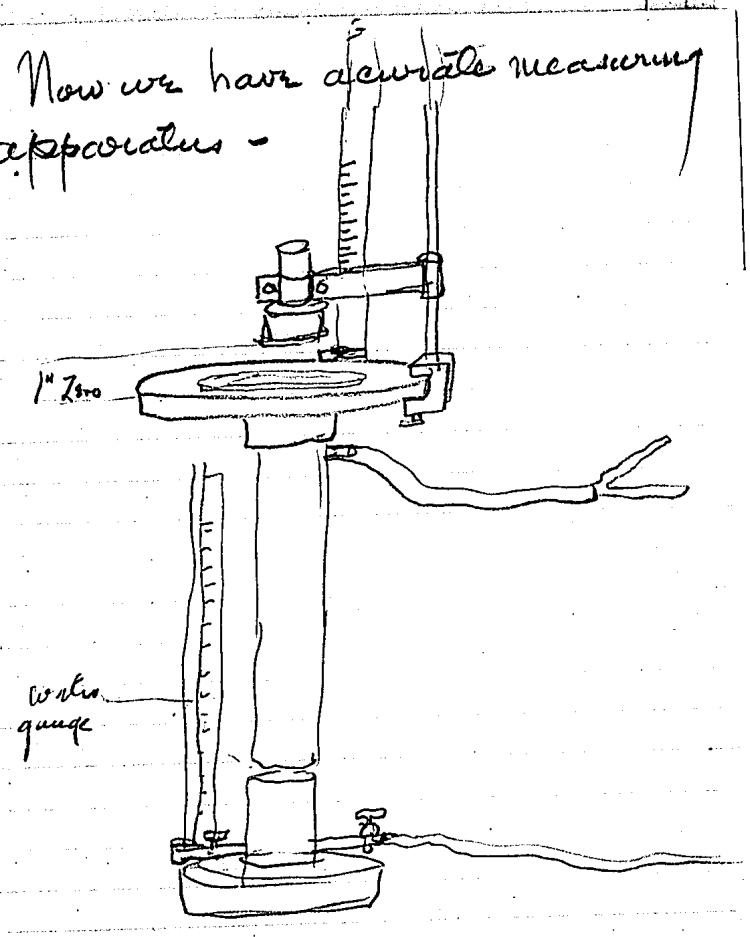

Fork 293 about Electrically driven — Bell reed
no Disc about 1/8" away

from farong

We find that to get accurate results must run curves nights –

Practically with $4\frac{1}{2}$ dea $2\frac{11}{14}$ opening

Most part of note is heard in 1 inch range + peak in 4/10 ths of inch its twice as loud in the 4/10 as other parts

In a rough preliminary Experiment put a microfon in ckt at sending station + made noise loudest Jenny at 4 inches Condenser note recevers to 6 or 1" away

hear note but heard
noise 7 ft —
I could hear note when
phone at ear. + noise 1/4" from
ear but no note —
Putting Recor on Resonator
4" up Jerry heard note
+ of Course noise
Note was of course
amplified relative to
the noise —
It looks pretty good!

Jerry hears fork on 4½ Dia 2¼ hole
2.8 inches — on scale against 18 inches + 10 inches —
This shows big loss of efficiency
to detect amp noise —

Sandy Hook Experiments

Experiments for direction —

Yacht anchored off NYCRRR Pier Highlands — Small dinner bell 4" used Clapper fell by gravity on bell — Used skiff — Receiver #3 Weather perfect & ideal

Funnel straight in line with Bell + 90 deg & 180°

50 yards

Straight	High	60
	Low	60
Angle 90°	High	42
	Low	20
Angle 180	High	34
	Low	18

100 yards

Straight	High	44
	Low	32
90°	High	14
	Low	8
Dup - 90	High	36
	Low -	16
180°	High	24
	Low	12

125 yards

Straight	High	30	
	Low	26	
90°	High	28	
	Low	22	
180	High	—	no sea
	Low	2	very faint

40 yards

Straight	High	60
	Low	56
90°	High	46
	Low	34
180	High	44
	Low	28

Later in the afternoon when weather changed & sea was noisy again —
Took more readings
Squally white caps
Same appearance

To sum up

The strength of signals if funnel is in direct line is TWICE as great as if funnel was 90 degrees from direct line to sound

% is	Direct line funnel	53.6	%
	90° "	25.3	%
	180 "	21.1	%

The further away the sound the better is capacity to find direction

	Straight	90°	180°
50 yards	61.1%	20.4	18.36%
100 yards	53.3	26.6	20%

50 yards brings in an Error as ~~bad~~ as 60

Straight 100 90 only 50 or 1/2 –

75 yards

Strait	High	28
	Low	can't hear

50 yards

Strait	High	46
	Low	32
90°	High	22
	Low	16
180°	High	6
	Low	0 can't hear

When puff of wind comes Bell was lost completely.

25 yards

Strait	High	60
	Low	40
90°	High	30
	Low	18
180°	High	30
	Low	8 * sudden quiet

Heard also a boat which I

Can hear with funnel on
4.3/10 further than
without -

or 18½ times more
sensitive -

Couldnt see upon investigation
saw a tug boat about a mile away
directly in line with the funnel

Tests # 3 with funnel
disconnected - #4 small 4" base

75 yards Cant hear
50 " " "

40 yards just hear on high
this is limit - 5
1

Funnel On

40 yards	High	52
	Low	40
75 "	High	38
	Low	34
175 "	High	5
	Low	6

Noise greater now -

This proves funnel to of enormous
Value. both for desicuss + direction